Steel Column Analysis2/23

HW – Steel Column Analysis

Structure II
Section 004

Yifan Ma
yifanma@umich.edu

Tower Project

Timeline Change

Prelim Report

Due Today- Feb 23

Tower Testing

Mar 20 Wednesday!

DATE	TOPIC	Text Reading	PROBLEMS (due dates online)
JAN 10	Course Intro	Onouye, Schodek	
JAN 12	Wood Properties	NDS	
JAN 15	**Martin Luther King Day **** No Class **** Martin Luther King Day **** No Class**		
JAN 17	Wood Beam Analysis	Schodek 6.4.2	
JAN 19	Recitation **[1-Wood Beams]**		
			1. Wood Beam Analysis
JAN 22	Wood Beam Design	Onouye 8	
JAN 24	Wood Column Analysis	Onouye 9.1-9.2 & 9.4, Schodek 7.4.3	
JAN 26	Recitation		
			2. Wood Beam Design
JAN 29	Wood Column Design - Tower Intro	NDS	
JAN 31	Cross Laminated Timbers	CLT Handbook	
FEB 2	Recitation **[2-Wood Columns]**		
			3. Wood Column Analysis
FEB 5	Steel Properties	AISC, Onouye 8.7	
FEB 7	Steel Beam Analysis	Schodek 6.4.3	
FEB 9	Recitation **[3-Steel Beams]**		
			4 Steel Beam Analysis
FEB 12	Steel Beam Design	Schodek 6.4.3	
FEB 14	Steel Column Analysis	Onouye 9.3, Schodek 7.4.4	
~~FEB 16~~	Recitation **[4-Steel Columns]**		**Prelim. Tower Report Due**
			5. Steel Beam Design
FEB 19	Steel Column Design	Onouye 9.3, Schodek 7.4.4	
FEB 21	"Skyscrapers" David Macaulay video		
FEB 23	Recitation		
			6. Steel Column Analysis
FEB 26	**WINTER RECESS **** NO CLASS **** WINTER RECESS **** NO CLASS ******		
FEB 27	**WINTER RECESS **** NO CLASS **** WINTER RECESS **** NO CLASS ******		
MAR 1	**WINTER RECESS **** NO CLASS **** WINTER RECESS **** NO CLASS ******		
MAR 4	Continuous Beams	I. Engel Ch. 17, Schodek 8	
MAR 6	Gerber Beams	Schodek 8.4.4	
MAR 8	Recitation **[5-Continuous Beams]**		
			7. Three Moment Theorem
MAR 11	Intro to Concrete – PCA video.		
MAR 13	Concrete Beams	Schodek 6.4.4 – 6.4.6	
MAR 15	Recitation **[6-Stress vs Strain]**		
MAR 20	Concrete Beams	I. Engel Ch.15	
~~MAR 18~~	**Tower Testing **** Tower Testing **** Tower Testing **** Tower Testing ******		
MAR 22	Recitation		
			8. Concrete Beam Analysis
MAR 25	Concrete Beams		
MAR 27	Concrete Columns	Schodek 7.4.5	
MAR 29	Recitation **[7-Concrete Reinforcing]**		
			9. Concrete Beam Design
APR 1	Composite Sections	TMS 402	
APR 3	Masonry Walls	TMS 402	
APR 5	Recitation **[8-Composite Sections]**		
			10. Composite Sections
APR 8	Masonry Walls	TMS 402	
APR 10	Shells and Vaults	Schodek 12	
APR 12	Recitation **[9-Lateral Stability]**	**Final Tower Report Due**	
			11. Masonry Walls
APR 15	Combined Stress	I. Engel Ch. 19	
APR 17	Combined Stress	I. Engel Ch. 19	
APR 19	Recitation **[10-Combined Stress]**		
			12. Combined Stress
APR 22	Prestress & Post Tension		

6. Steel Column Analysis

For the given axially loaded steel W-section, determine the maximum floor live load capacity, P LL. Assume the column is pinned top and bottom: K = 1.0, and there is no intermediate bracing. Use AISC-LRFD steel equations to determine phi Pn and the load. E = 29000 ksi.

DATASET: 1 -2- -3-

W-section	W8X31
Fy	50 KSI
Span A	36 FT
Span B	34 FT
Height L	15 FT
Floor Dead Load	42 PSF

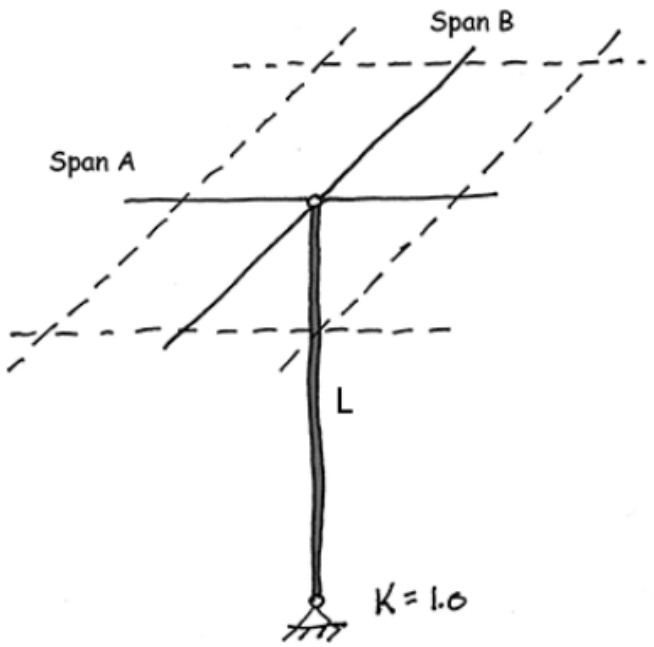

HW - Steel Column Analysis

Given:
Pinned top and bottom (Le=L)
No bracing
Member size

Goal:
Floor Live Capacity?

1. Calculate slenderness ratios. Lc/rx and Lc/ry, Lc=KL
   The largest ratio governs.
2. Check the slenderness ratio against the upper limit of 200 (recommended)
3. Calculate transition slenderness $4.71\sqrt{E/Fy}$ and determine column type (short or long)
4. Calculate Fcr based on slenderness
5. Determine øPn and
   Compute allowable capacity:
   Pn = Fcr * Ag Pu = øPn

$$F_{cr} = \left[0.658^{\frac{F_y}{F_e}}\right]F_y$$ Short

$$F_{cr} = 0.877F_e$$ Long

- ARCH 324 001 WN 2024
  - Beam Equations
  - Concrete
  - course_image
  - Design Loads
  - Engel_Book
  - Masonry
  - Onouye_Book_4e
  - Schodek_Book_7e
  - Steel
  - Uploaded Media
  - Videos
  - Wood

Name	Date Created	Date Modified	Modified By	Size
AISC_360_22_16th_Edition.pdf	Feb 9, 2024	Feb 9, 2024	Peter David von Buel...	8 MB
AISC_d831.pdf	Feb 3, 2022	Feb 3, 2022		9.4 MB
AISC9_BeamEquations.PDF	Jan 9, 2017	Jan 9, 2017		35 MB
AISC14_BeamChart.pdf	Dec 30, 2016	Dec 30, 2016		163.5 MB
AISC14_Table1-1.pdf	Feb 8, 2017	Feb 8, 2017		14.5 MB
AISC14_Table3-2.pdf	Feb 8, 2017	Feb 8, 2017		5.3 MB
AISC14_Table4-22.pdf	Feb 12, 2017	Feb 12, 2017		1 MB
MobileEngineerApp.txt	Jan 9, 2017	Jan 9, 2017		88 bytes

6. Steel Column Analysis

For the given axially loaded steel W-section, determine the maximum floor live load capacity, P LL. Assume the column is pinned top and bottom: K = 1.0, and there is no intermediate bracing. Use AISC-LRFD steel equations to determine phi Pn and the load. E = 29000 ksi.

DATASET: 1 -2- -3-

W-section	W8X31
Fy	50 KSI
Span A	36 FT
Span B	34 FT
Height L	15 FT
Floor Dead Load	42 PSF

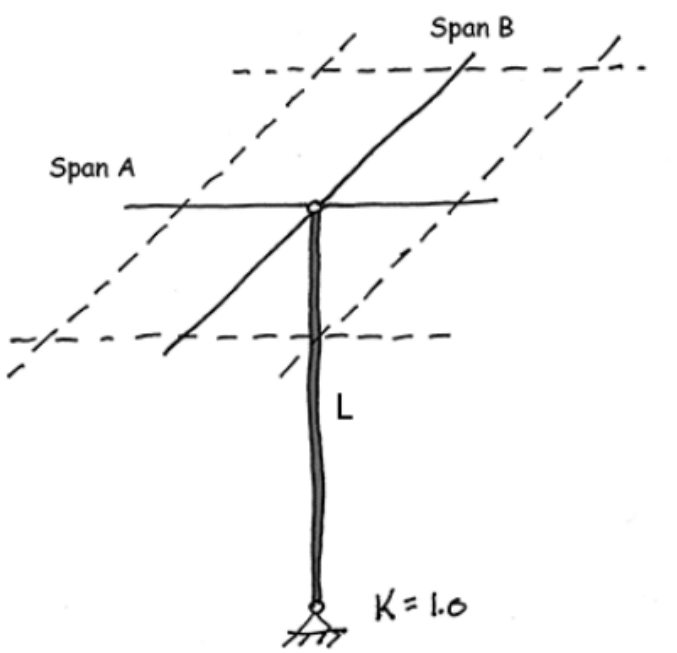

1. Total unfactored floor dead load on the column

P_DL= DL *SpanA* SpanB = 42*36*34/1000 = 51.408 Kips

2. Controlling Slenderness ratio

Slenderness Ratio = KL/r

1–28 DIMENSIONS AND PROPERTIES

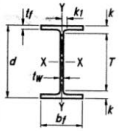

Table 1-1 (continued)
W-Shapes
Dimensions

Shape	Area, A	Depth, d	Web Thickness, t_w	$\frac{t_w}{2}$	Flange Width, b_f	Flange Thickness, t_f	Distance k	k_{des}	k_{det}	k_1	T	Workable Gage
	in.^{2}	in.	in.	in.	in.	in.	in.	in.	in.	in.	in.	in.
W8×67	19.7	9.00	0.570	9/16	5/16	8.28	8 1/4	0.935	15/16	1.33	1 5/8	15/16	5 3/4	5 1/2
×58	17.1	8.75	8 3/4	0.510	1/2	1/4	8.22	8 1/4	0.810	13/16	1.20	1 1/2	7/8	↓	↓
×48	14.1	8.50	8 1/2	0.400	3/8	3/16	8.11	8 1/8	0.685	11/16	1.08	1 3/8	13/16	↓	↓
×40	11.7	8.25	8 1/4	0.360	3/8	3/16	8.07	8 1/8	0.560	9/16	0.954	1 1/4	13/16	↓	↓
×35	10.3	8.12	8 1/8	0.310	5/16	3/16	8.02	8	0.495	1/2	0.889	1 3/16	13/16	↓	↓
×31[f]	9.13	8.00	8	0.285	5/16	3/16	8.00	8	0.435	7/16	0.829	1 1/8	3/4	↓	↓
W8×28	8.25	8.06	8	0.285	5/16	3/16	6.54	6 1/2	0.465	7/16	0.859	15/16	5/8	6 1/8	4
×24	7.08	7.93	7 7/8	0.245	1/4	1/8	6.50	6 1/2	0.400	3/8	0.794	7/8	9/16	6 1/8	4

DIMENSIONS AND PROPERTIES 1–29

Table 1-1 (continued)
W-Shapes
Properties

W8-W4

Nominal Wt.	Compact Section Criteria $\frac{b_f}{2t_f}$	$\frac{h}{t_w}$	Axis X-X I	S	r	Z	Axis Y-Y I	S	r	Z	r_{ts}	h_o	Torsional Properties J	C_w
lb/ft			in.^{4}	in.^{3}	in.	in.^{3}	in.^{4}	in.^{3}	in.	in.^{3}	in.	in.	in.^{4}	in.^{6}
67	4.43	11.1	272	60.4	3.72	70.1	88.6	21.4	2.12	32.7	2.43	8.07	5.05	1440
58	5.07	12.4	228	52.0	3.65	59.8	75.1	18.3	2.10	27.9	2.39	7.94	3.33	1180
48	5.92	15.9	184	43.2	3.61	49.0	60.9	15.0	2.08	22.9	2.35	7.82	1.96	931
40	7.21	17.6	146	35.5	3.53	39.8	49.1	12.2	2.04	18.5	2.31	7.69	1.12	726
35	8.10	20.5	127	31.2	3.51	34.7	42.6	10.6	2.03	16.1	2.28	7.63	0.769	619
31	9.19	22.3	110	27.5	3.47	30.4	37.1	9.27	2.02	14.1	2.26	7.57	0.536	530
28	7.03	22.3	98.0	24.3	3.45	27.2	21.7	6.63	1.62	10.1	1.84	7.60	0.537	312
24	8.12	25.9	82.7	20.9	3.42	23.1	18.3	5.63	1.61	8.57	1.81	7.53	0.346	259

rx=3.47>ry=2.02

KL/ry>KL/rx

Controlling Slenderness ratio= KL/ry = 1*15*12/2.02 = 89.11

Analysis of Steel Columns

Short columns
Fail by material crushing
Plastic behavior

Intermediate columns
Crush partially and then buckle
Inelastic behavior
Local buckling – flange or web
Flexural torsional buckling - twisting

Long columns
Fail in Euler buckling
Elastic behavior

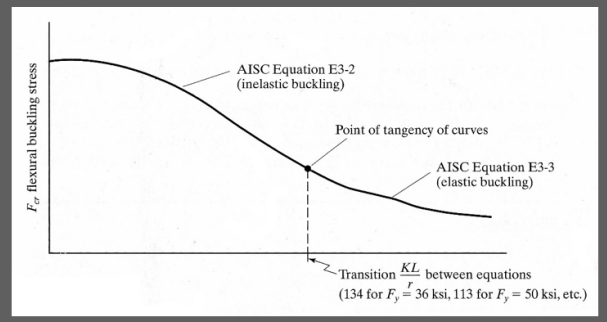

$$slenderness = \frac{KL}{r}$$

short intermediate long

Analysis of Steel Columns - LRFD

Euler equation:

$$F_e = \frac{\pi^2 E}{\left(\frac{KL}{r}\right)^2}$$

Short & Intermediate Columns:

$$F_{cr} = \left[0.658^{\frac{F_y}{F_e}}\right] F_y$$

Long Columns:

$$F_{cr} = 0.877 F_e$$

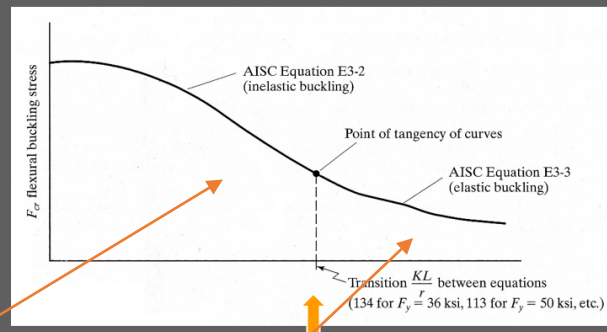

short long

Transition Slenderness

$$4.71\sqrt{\frac{E}{F_y}}$$

$$P_n = F_{cr} A_g$$

$$\phi_c P_n = \phi_c F_{cr} A_g$$

$$(\phi_c = 0.90)$$

6. Steel Column Analysis

For the given axially loaded steel W-section, determine the maximum floor live load capacity, P LL. Assume the column is pinned top and bottom: K = 1.0, and there is no intermediate bracing. Use AISC-LRFD steel equations to determine phi Pn and the load. E = 29000 ksi.

DATASET: 1 -2- -3-

W-section	W8X31
Fy	50 KSI
Span A	36 FT
Span B	34 FT
Height L	15 FT
Floor Dead Load	42 PSF

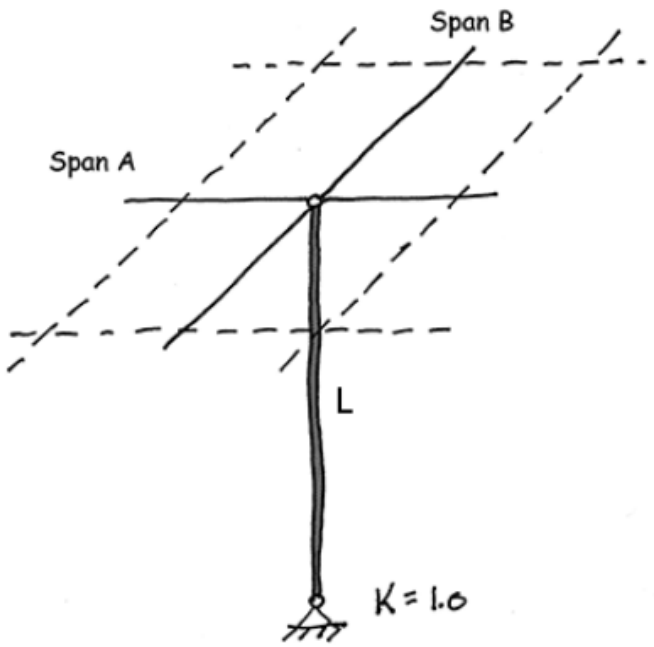

3. Transition slenderness value

$4.71*\sqrt{E/Fy} = 4.71*\sqrt{29000/50} = 113.43$

> Controlling Slenderness ratio= 89.11

Short Column

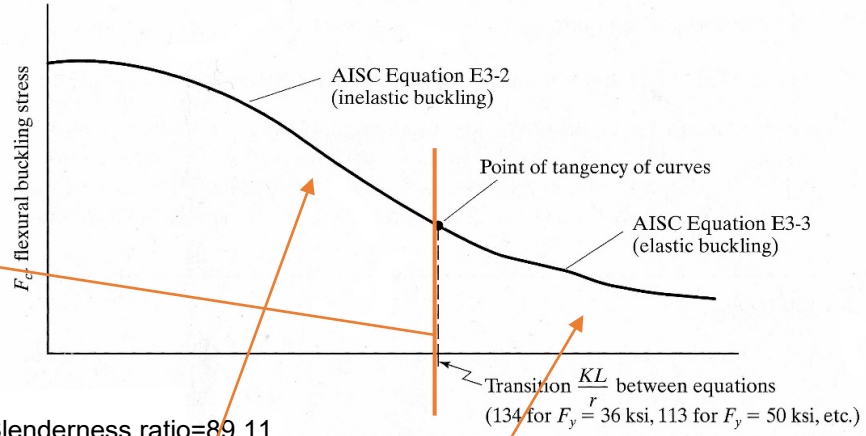

Controlling Slenderness ratio=89.11

Transition slenderness value=113.43

4. Euler Stress, Fe

$$F_e = \frac{\pi^2 E}{\left(\frac{KL}{r}\right)^2} = \pi^2*29000/89.11^2 = 36.04 \text{ ksi}$$

5. Critical stress, Fcr

$$F_{cr} = \left[0.658^{\frac{F_y}{F_e}}\right]F_y$$

= 0.658^(50/36.04)*50
= 27.976 ksi

$$F_{cr} = \left[0.658^{\frac{F_y}{F_e}}\right]F_y$$

Short & Intermediate

$$F_{cr} = 0.877F_e$$

Long

6. Steel Column Analysis

For the given axially loaded steel W-section, determine the maximum floor live load capacity, P LL. Assume the column is pinned top and bottom: K = 1.0, and there is no intermediate bracing. Use AISC-LRFD steel equations to determine phi Pn and the load. E = 29000 ksi.

DATASET: 1 -2- -3-

W-section	W8X31
Fy	50 KSI
Span A	36 FT
Span B	34 FT
Height L	15 FT
Floor Dead Load	42 PSF

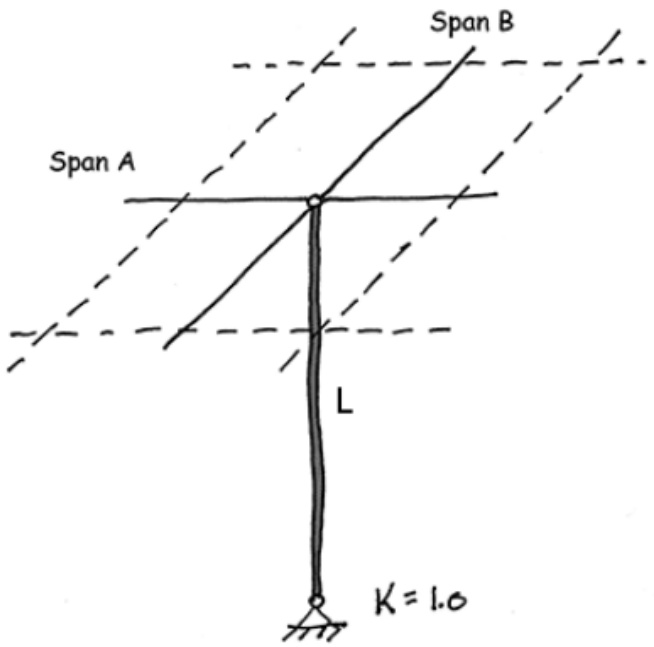

6. Nominalstrength,Pn

Pn= Fcr* Ag = 27.976*9.13 = 255.42 kips

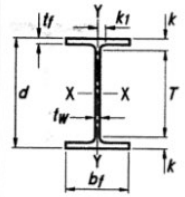

Table 1-1 (continued)
W-Shapes
Dimensions

Shape	Area, A	Depth, d	Web Thickness, t_w	Web $\frac{t_w}{2}$	Flange Width, b_f	Flange Thickness, t_f	Distance k k_{des}	Distance k k_{det}	Distance k_1	Distance T	Distance Workable Gage
	in.^{2}	in.	in.	in.	in.	in.	in.	in.	in.	in.	in.
W8×67	19.7	9.00	9	0.570	9/16	5/16	8.28	8 1/4	0.935	15/16	1.33	1 5/8	15/16	5 3/4	5 1/2
×58	17.1	8.75	8 3/4	0.510	1/2	1/4	8.22	8 1/4	0.810	13/16	1.20	1 1/2	7/8		
×48	14.1	8.50	8 1/2	0.400	3/8	3/16	8.11	8 1/8	0.685	11/16	1.08	1 3/8	13/16		
×40	11.7	8.25	8 1/4	0.360	3/8	3/16	8.07	8 1/8	0.560	9/16	0.954	1 1/4	13/16		
×35	10.3	8.12	8 1/8	0.310	5/16	3/16	8.02	8	0.495	1/2	0.889	1 3/16	13/16		
×31[f]	9.13	8.00	8	0.285	5/16	3/16	8.00	8	0.435	7/16	0.829	1 1/8	3/4		
W8×28	8.25	8.06	8	0.285	5/16	3/16	6.54	6 1/2	0.465	7/16	0.859	15/16	5/8	6 1/8	4
×24	7.08	7.93	7 7/8	0.245	1/4	1/8	6.50	6 1/2	0.400	3/8	0.794	7/8	9/16	6 1/8	4

7. Factored Nominal Strength, phi Pn

Pu = øPn = 0.9*255.42 = 229.878 kips

8. UnFactored Live Load on column (actual total LL)

Pu = ø Pn = 1.2 P_DL+1.6 P_LL

P_LL=(229.878-1.2*51.408) /1.6 = 105.118 kips

LRFD Analysis

Load & Resistance Factored Design (LRFD)

- Use loads with safety factor γ
- Use forces with strength factor ϕ

$P_{load} = \gamma \cdot P_{applied}$ $P_{load} \le P_{resisting}$ $P_{resisting} = \phi \cdot P_{material}$

Design Strength $P_u \le \phi P_n$ Required (Nominal) Strength

2.3 LOAD COMBINATIONS FOR STRENGTH DESIGN

1. $1.4D$
2. $1.2D + 1.6L + 0.5(L_r \text{ or } S \text{ or } R)$
3. $1.2D + 1.6(L_r \text{ or } S \text{ or } R) + (L \text{ or } 0.5W)$
4. $1.2D + 1.0W + L + 0.5(L_r \text{ or } S \text{ or } R)$
5. $0.9D + 1.0W$

9.Actual unfactored floor live load PSF

LL = P_LL/ (SpanA * SpanB) = 105.118/(36*34) * 1000 = 85.88 PSF

Any Questions?

yifanma@umich.edu

Thank You!